Econo-Therm

INDUSTRIAL THERMOMETERS

4352 shown

- **5½" Scale Size**
- **± 1 Scale Division Accuracy**
- **Cast Aluminum Case**
- **Rigid Straight or Rigid 90˚Angle Case**

The Trerice **Econo Thermometer** provides accuracy and durability at an economical price. This liquid-in-glass thermometer has a durable cast aluminum case and a polycarbonate frame front and window. Rigid straight and rigid 90° angle cases are available.

- Optional features available: Please consult the Options & Accessories Section for details.
- Trerice Econo Thermometers (air-duct stem excluded) have no external mounting hardware, and as such, require the use of a thermowell, which is attached to the stem via a set screw. The thermowell must be ordered separately – please refer to page 153 of the Thermowell Section.

Specifications

Models	Scale Size	
4350	5½"	Rigid Straight
4352	5½"	Rigid 90˚ Angle

Fill Type	Spirit: Blue colored, organic
Case	Cast aluminum, blue epoxy finish
Stem	Aluminum, brass or air-duct style
Connection	Use of thermowell required (must be ordered separately) Air-duct stem has mounting flange with 3 bolt holes
Window	Polycarbonate frame front
Tube	Lens front, magnifying type
Scale	Aluminum, white background with black graduations and markings
Accuracy	±1 scale division
Approximate Shipping Weight	0.5 lbs [0.23 kg]

HOW TO ORDER

Sample Order Number: **4350 1 02 07**

Model	Stem (Material)	Stem (Length)	Specific Range
4350 Straight **4352** 90˚ Angle	**1** Aluminum* **2** Brass **9** Air-Duct **	**02** 2" (Aluminum Stem only) **04** 4" (Brass Stem only) **06** 6" (Air-Duct Stem)	See Standard Ranges

*Use of thermowell required (must be ordered separately-refer to page 153).
**Model 4352 only

12950 W. Eight Mile Road • Oak Park, MI 48237-3288 • TEL:248/399-8000 • FAX: 248/399-7246 • www.TRERICE.com

All dimensions are nominal.
Dimensions in [ ] are in millimeters.

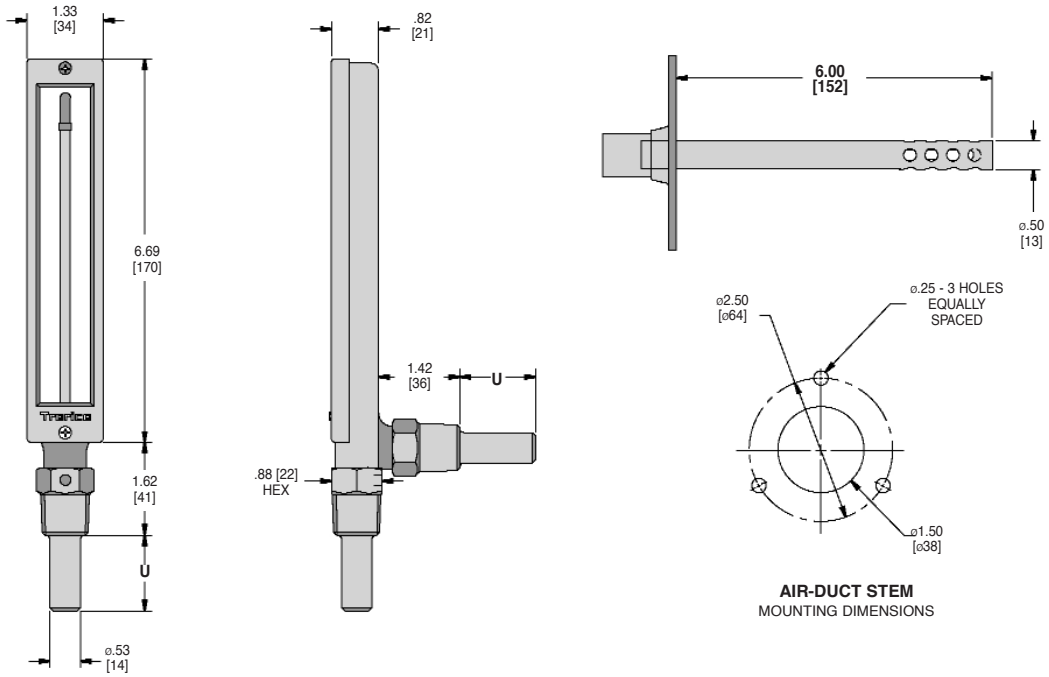

AIR-DUCT STEM
MOUNTING DIMENSIONS

Note: Shown with required thermowell (must be ordered separately. Refer to page 153.)

U Length	Dimension
2" (Aluminum)	1.31 [33.3]
4" (Brass)	3.25 [82.6]
6" (Air-Duct)	6.00 [152.4]

Standard Ranges

Fahrenheit Scale		Celsius Scale		Dual Scale		Fahrenheit		Celsius	
Range Code	Range	Range Code	Range	Range Code	Range	Figure Intervals	Minor Divisions	Figure Intervals	Minor Divisions
01	–40° to 110°F	17	–40° to 40°C	41	–40° to 110°F & –40° to 40°C	20°	2°	10°	1°
03	30° to 130°F	25	0° to 55°C	43	30° to 130°F & 0° to 55°C	10°	1°	5°	1°
06	30° to 180°F	27	0° to 83°C	46	30° to 180°F & 0° to 83°C	20°	2°	10°	1°
07	30° to 240°F	19	0° to 115°C	47	30° to 240°F & 0° to 115°C	20°	2°	10°	1°

Dual scale figure intervals may differ.